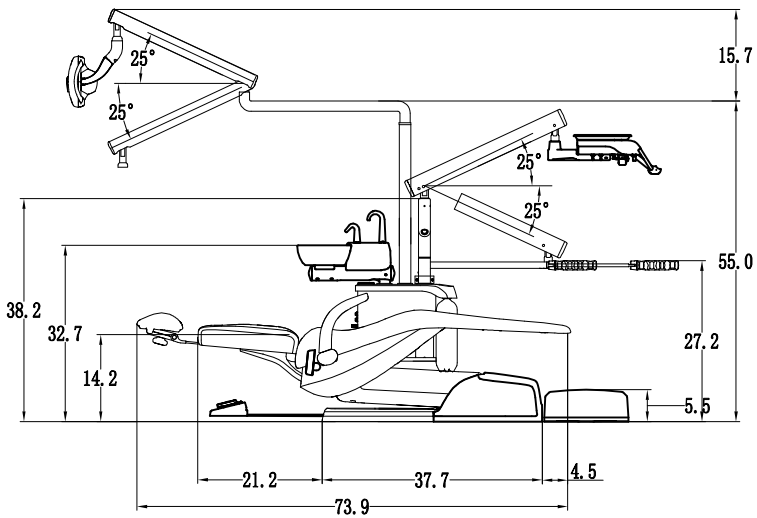
25°
25°
25°
25°
15.7
55.0
38.2
32.7
14.2
27.2
5.5
21.2
37.7
4.5
73.9

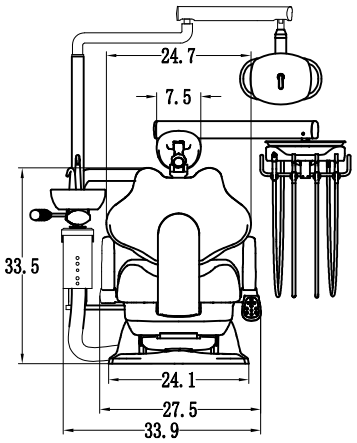
24.7
7.5
33.5
24.1
27.5
33.9

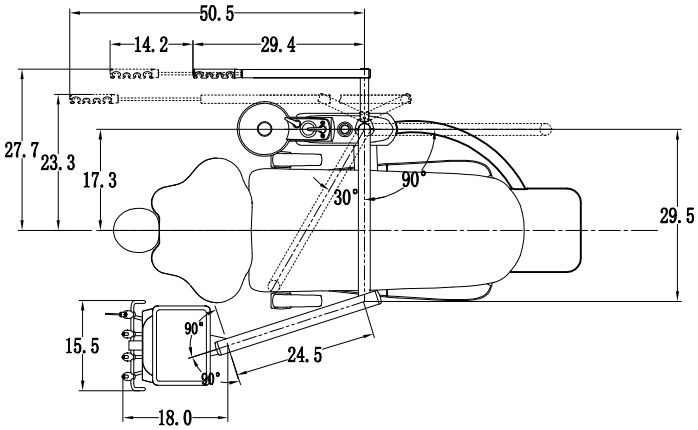
50.5
14.2
29.4
27.7
23.3
17.3
30°
90°
29.5
15.5
90°
90°
24.5
18.0

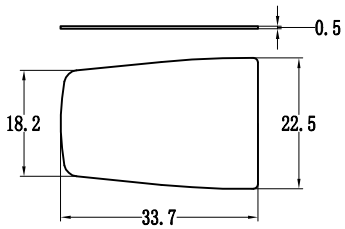
0.5
18.2
22.5
33.7

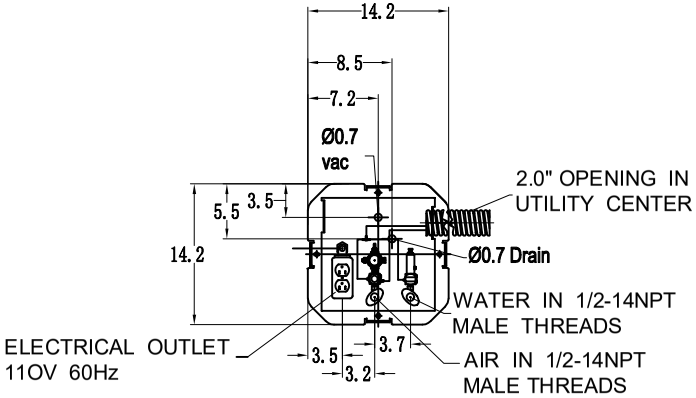
14.2
8.5
7.2
Ø0.7
vac
2.0" OPENING IN
UTILITY CENTER
5.5
3.5
14.2
Ø0.7 Drain
WATER IN 1/2-14NPT
MALE THREADS
ELECTRICAL OUTLET
11OV 60Hz
3.5
3.7
3.2
AIR IN 1/2-14NPT
MALE THREADS